BRINK

Air for life

Technical Data Sheet

Flair 450/600
English

Contents

1 Delivery

1.1 Delivery size

Before installation of the heat recovery appliance is started, check that it has been supplied in complete and undamaged condition.

The delivery size of the heat recovery appliance type Flair 450/600 consists of the following components:

1. Heat recovery appliance
2. Wall mounting bracket consisting of:
   - 1x mounting bracket
   - 2x protective caps
   - 2x rubber strip
   - 3x rubber rings
   - 1x washer
3. Siphon
4. Documentation set consisting of:
   - 1x short installation instructions
   - 1x occupant's instructions

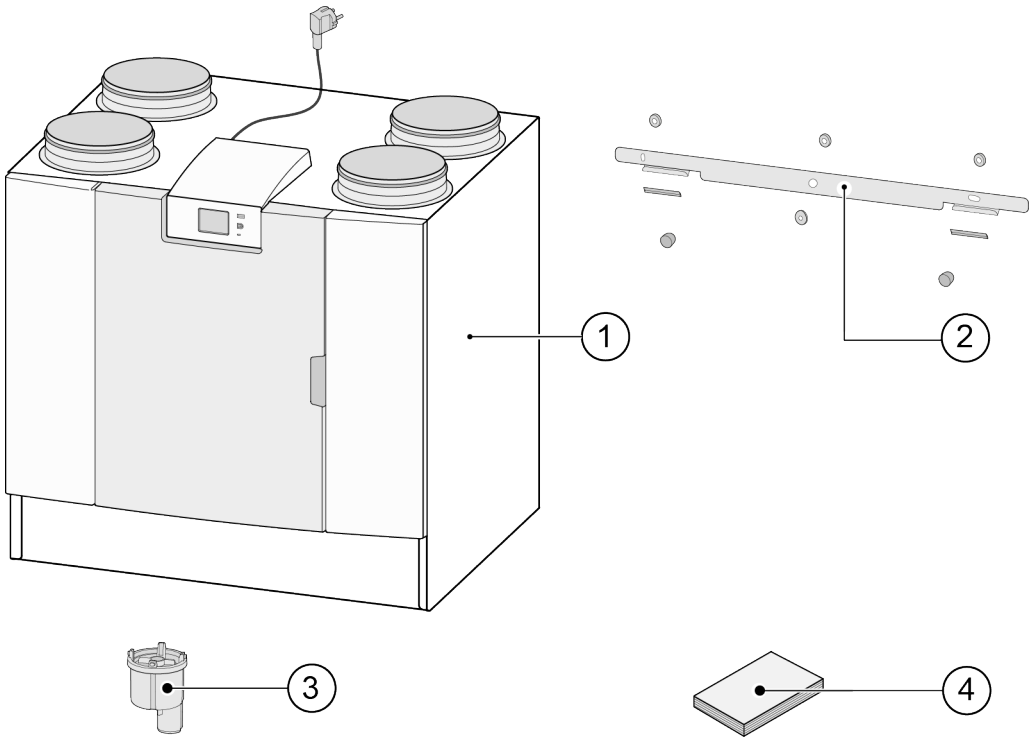

2 Version

2.1 Technical information Flair 450

Flair 450										
Supply voltage [V/Hz]	230V/50Hz									
Dimensions (w x h x d) [mm]	850 x 800 x 660									
Duct diameter [mm]	ø200									
Ext. diameter condensate discharge [mm]	ø32									
Weight [kg]	49									
Filter class	ISO Coarse 60% (ISO ePM1.0 50% for the air supply optional)									
Fan setting (factory setting)	0		1		2		3		max	
Factory setting [m³/h]	75		100		200		300		450	
Permissible resistance of duct system [Pa]	3	6	5	10	20	40	44	89	100	200
Rated power (excl. preheater) [W]	10.4	10.8	12.4	13.2	17.6	23.8	51.9	69.3	149.5	198.8
Rated current (excl. preheater) [A]	0.17	0.17	0.19	0.19	0.20	0.27	0.53	0.69	1.32	1.68
Max. rated current (incl. preheater switched on) [A]	5.2									
Rated power preheater [W]	1000									
Cos φ	0.271	0.274	0.291	0.295	0.378	0.383	0.425	0.437	0.492	0.514

Sound power								
Ventilation capacity [m³/h]		100	200	200	300	300	450	450
Sound power level Lw(A)	Static pressure [Pa]	25	25	50	50	100	100	150
	Casing radiation [dB(A)]	< 38.1	36.5	42.0	45.5	46.0	51.7	54.0
	Duct “Extract air" [db(A)]	< 36.3	38.5	40.0	45.0	42.5	49.0	49.5
	Duct "Supply Air" [db(A)]	< 38.5	43.5	47.5	53.0	53.5	58.6	59.0

*) Duct noise including end correction
In practice the value may differ by 1dB(A) through measurement tolerances.

Resistance of duct system [Pa]

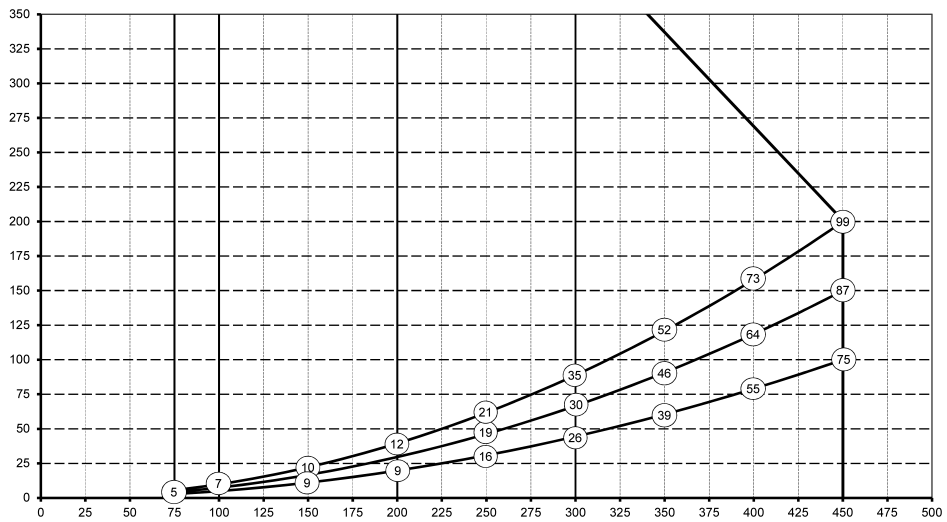

Flow rate [m³/h]

Note:
The stated value in the circle is the capacity (in Watt) per fan.

2.2 Technical information Flair 600

Flair 600										
Supply voltage [V/Hz]	230V/50Hz									
Dimensions (w x h x d) [mm]	850 x 800 x 660									
Duct diameter [mm]	ø200									
Ext. diameter condensate discharge [mm]	ø32									
Weight [kg]	49									
Filter class	ISO Coarse 60% (ISO ePM1.0 50% for the air supply optional)									
Fan setting (factory setting)	0		1		2		3		max	
Factory setting [m³/h]	100		150		300		500		600	
Permissible resistance of duct system [Pa]	3	6	6	13	25	50	69	139	100	188
Rated power (excl. preheater) [W]	12.1	12.5	17.2	18.3	44.5	54.2	166.6	203.1	260.6	288.0
Rated current (excl. preheater) [A]	0.18	0.19	0.23	0.24	0.46	0.55	1.45	1.71	2.11	2.3
Max. rated current (incl. preheater switched on) [A]	5.7									
Rated power preheater [W]	1000									
Cos φ	0.288	0.291	0.322	0.327	0.421	0.427	0.500	0.516	0.536	0.544

Sound power								
Ventilation capacity [m³/h]		150	300	300	500	500	600	600
Sound power level Lw(A)	Static pressure [Pa]	25	50	100	100	150	100	150
	Casing radiation [dB(A)]	37.5	45.5	46.0	56.0	54.5	56.5	56.5
	Duct “Extract Air" [db(A)]	35.0	45.0	42.5	51.0	52.0	53.5	56.5
	Duct ‘To dwelling’ [db(A)]	43.5	53.0	53.5	60.5	61.5	62.0	66.6

*) Duct noise including end correction
In practice the value may differ by 1dB(A) through measurement tolerances.

Resistance of duct system [Pa]

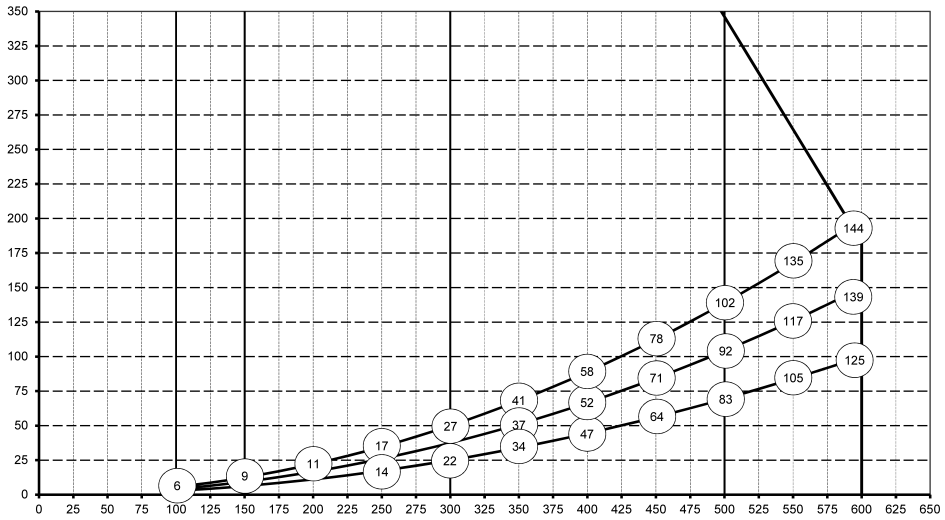

Flow rate [m³/h]

Note:
The stated value in the circle is the capacity (in Watt) per fan.

2.3 Connections and dimensions

The Flair appliance is available in a left-hand and right-hand version. With a left-hand version the "warm" connections (from dwelling 3 and to dwelling 1) are on the left-hand side of the appliance; the condensate discharge is then mounted at the right-hand opening below the appliance. With a right-hand version the "warm" connections (1 & 3) are on the right-hand side of the appliance.

Left-hand version

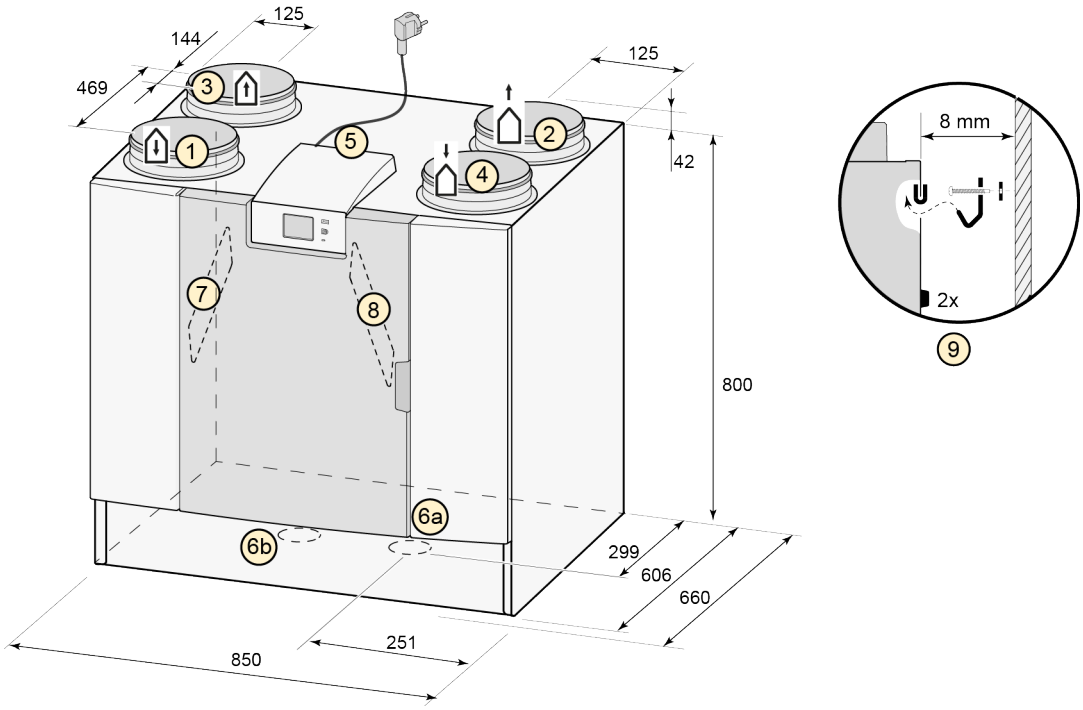

All dimensions in millimeters. Diameter of all collars is 200 mm

1	Supply air	↓
2	Exhaust air	↑
3	Extract air	↑
4	Outdoor air	↓
5	Electrical connections	
6a	Siphon connection	
6b	Sealing cap unused condensate discharge connection; do not remove!	
7	Extract air filter	
8	Supply air filter	
9	Mounting bracket	

Right-hand version

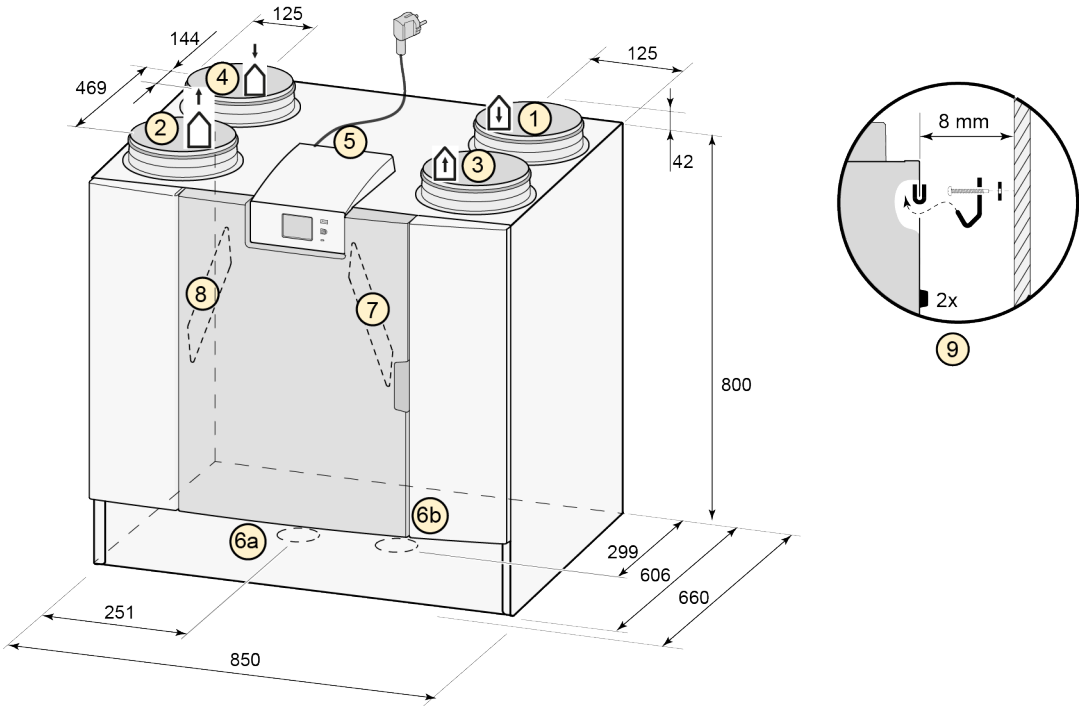

All dimensions in millimeters. Diameter of all collars is 200 mm

1	To dwelling	↓
2	Exhaust air	↑
3	Extract air	↑
4	Outdoor air	↓
5	Electrical connections	
6a	Siphon connection	
6b	Sealing cap unused condensate discharge connection; do not remove!	
7	Extract air filter	
8	Supply air filter	
9	Mounting bracket	

2.4 Exploded view of appliance

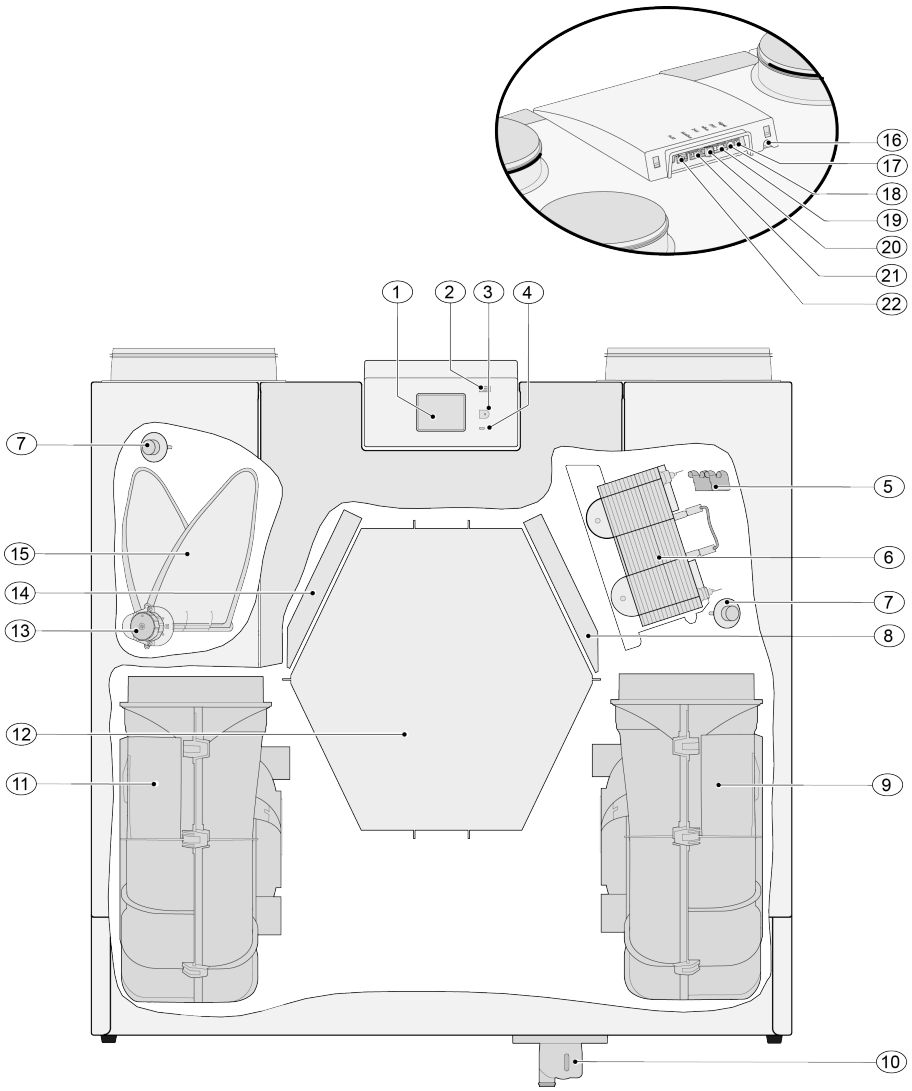

The appliance shown above is a left-hand version: in the case of a right-hand version, the connector of the preheater, bypass valve and the siphon connector are installed in mirror image!				
1	Touchscreen		12	Heat exchanger
2	USB connector (X13)		13	Motor bypass valve
3	Service connector		14	Exhaust air filter
4	LED indicator		15	Bypass valve
5	Maximum protection preheater		16	Power cable 230 volt
6	Preheater		17	Signal output (X19))
7	Temperature sensor (2x)		18	24 volt connector (X18)
8	Supply filter		19	eBus connector (X17)
9	Exhaust fan		20	24 volt connector (X16)
10	Siphon		21	Modbus/ internal bus connector (X15)
11	Supply fan		22	Multiple switch connector (X14)

3 Service

3.1 Exploded view

When ordering parts, in addition to the article code number (see exploded view), please state the heat recovery appliance type, the serial number, the year of production and the name of the part:

N.B.: Appliance type, serial number and year of production are stated on the identification plate behind the plastic front panel on the appliance.

Example	
Appliance type	Flair 450/600
Serial number	432000221201
Year of production	2023
Part	Fan
Article code	533037
Quantity	1

3.2 Service articles

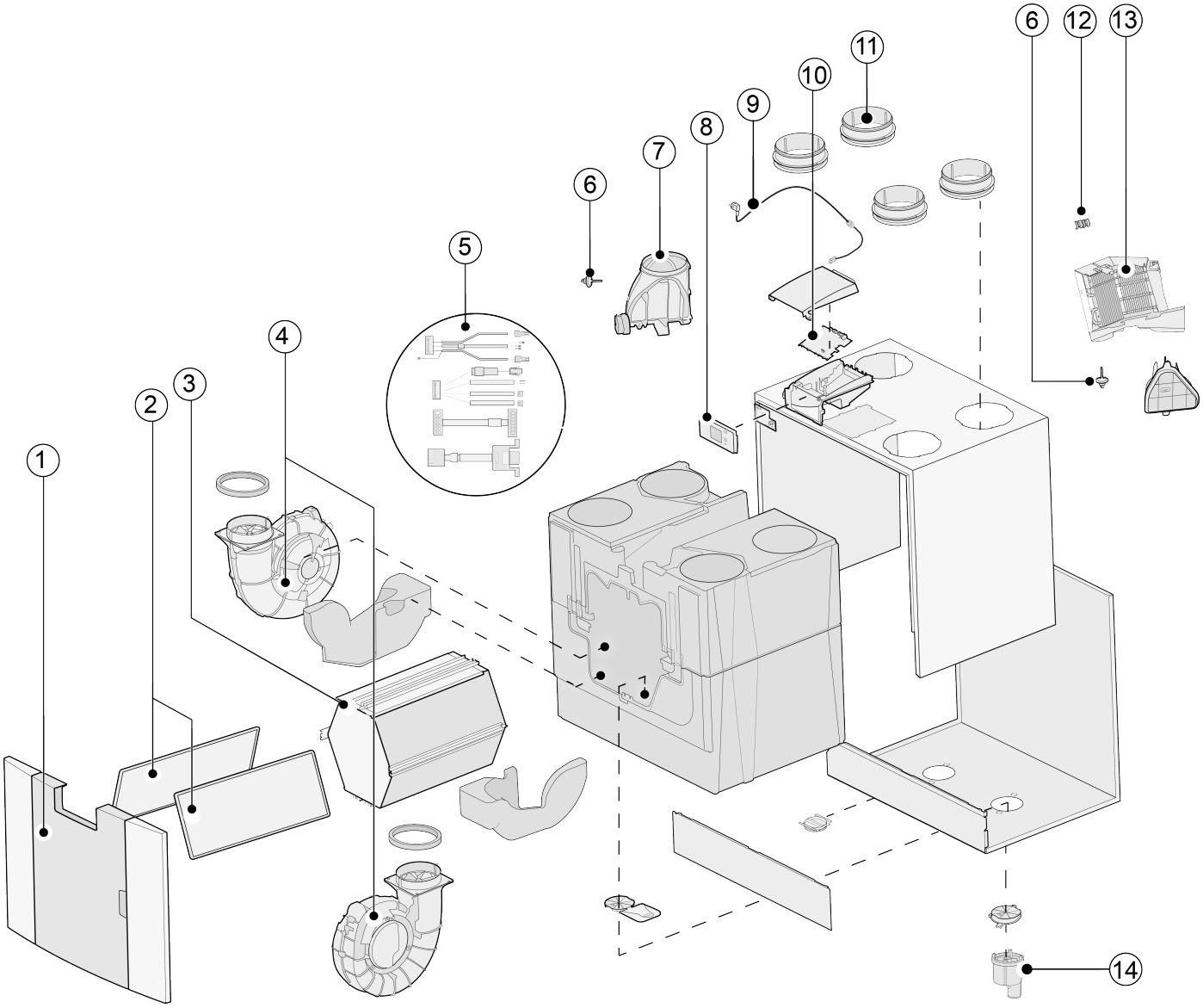

No.	Article description	Article code
1	Front panel complete Flair 450	532828
	Front panel complete Flair 600	532826
2	Filters (2 items) ISO Coarse 60%	532821
3	Heat exchanger	532885
4	Fan (1 item)	533037
5	Cable set	532891
6	Temperature sensor NTC 10K (1 item)	531775
7	Bypass valve with motor complete	532760
8	Display pcb UBP-2	532752
9	Mains plug and cable 230 V *	532929
10	Appliances manufactured **before 01-01-2023** : Basic pcb UWA2-B + display	532750
	Appliances manufactured **after 01-01-2023** : Basic pcb UWA2-B	532966
11	Collars 200 mm	532899
12	Maximum security	532769
13	Internal preheater	532886
14	Condensation discharge	532762

* The power cable is fitted with a circuit board connector. When replacing it, always order a replacement mains cable from Brink.
To prevent dangerous situations, a damaged mains connection can only be replaced by a qualified expert.

4 Conformity declaration

Manufacturer:	**Brink Climate Systems B.V.**
Address:	**P.O. Box 11** **NL-7950 AA, Staphorst, The Netherlands**
Product:	**Heat recovery appliance type:** **Flair 450** **Flair 600**

The product described above complies with the following directives:

♦ 2014/35/EU	(OJEU L 96/357; 29-03-2014)
♦ 2014/30/EU	(OJEU L 96/79; 29-03-2014)
♦ 2009/125/EU	(OJEU L 285/10; 31-10-2009)
♦ 2017/1369/EU	(OJEU L 198/1; 28-07-2017)
♦ RoHS 2011/65/EU	(OJEU L 174/88; 01-07-2011)

The product described above has been tested according to the following standards:

♦ EN IEC 55014-1:	2021
♦ EN IEC 55014-2:	2021
♦ EN IEC 61000-3-2:	2019 + A1:2021
♦ EN 61000-3-3:	2013 + A1:2019 + A2:2021
♦ EN 60335-1:	2012 + AC:2014 + A11:2014 + A13:2017 + A1:2019 + A2:2019 + A14:2019 + A15:2021
♦ EN 60335-2-40:	2003 + A11:2004 + A12:2005 +AC:2006 + A1:2006 + A2:2009 + AC:2010 + A13:2012
♦ EN 62233:	2008 + AC:2008

Staphorst, 07-06-2023

A. Hans
Managing Director

5 ERP values Flair 450

Technical information sheet Flair 450 in accordance with Ecodesign (ErP), no. 1254/2014 (Annex IV)					
Manufacturer:		**Brink Climate Systems B.V.**			
Model:		**Flair450**			
Climate zone	**Type of control**	**SEC Value in kWh/m²/a**	**SEC Class**	**Annual electricity consumption (AEC) in kWh**	**Annual heating saved (AHS) in kWh**
Average	manual	-40.06	A	283	4646
	clock control	-40.76	A	260	4658
	1x sensor (RV/CO_2/VOC)	-42.09	A+	217	4684
	2 or more sensors (RV/CO_2/VOC)	-44.38	A+	146	4735
Cold	manual	-79.11	A+	820	9088
	clock control	-79.94	A+	797	9113
	1x sensor (RV/CO_2/VOC)	-81.51	A+	754	9163
	2 or more sensors (RV/CO_2/VOC)	-84.29	A+	683	9263
Hot	manual	-15.06	E	283	2101
	clock control	-15.69	E	215	2106
	1x sensor (RV/CO_2/VOC)	-16.88	E	172	2118
	2 or more sensors (RV/CO_2/VOC)	-18.90	E	101	2141
Type of ventilation unit:		Balanced residential ventilation appliance with heat recovery			
Fan:		EC - fan with infinitely variable control			
Type of heat exchanger:		Recuperative plastic cross-counterflow heat exchanger			
Thermal efficiency		92%			
Maximum flow rate:		450 m³/h			
Maximum rated power:		192 W			
Sound power level Lwa:		47 dB(A)			
Reference flow rate:		315 m³/h			
Reference pressure:		50 Pa			
Specific Power Input (SEL):		0.20 Wh/m³			
Control factor:		1.0 in combination with multiple switch			
		0.95 in combination with clock control			
		0.85 in combination with 1 sensor			
		0.65 in combination with 2 or more sensors			
Leakage*	Internal	0.90%			
	External	0.90%			
Position dirty filter indication:	On the display of the appliance / on the multiple switch (LED) / on the Brink Air Control. **Attention!** For optimal energy efficiency and a proper operation, a regular filter inspection, cleaning or replacement is necessary.				
Internet address for Assembly instructions:		https://www.brinkclimatesystems.nl/support/downloads			
Bypass:		Yes, 100% Bypass			

* Measurements executed by TZWL according to the DiBt-standards

Classification from 1 January 2016	
SEC class ("Average climate zone")	SEC in kWh/m²/a
A+ (Most efficient)	SEC < -42
A	-42 ≤ SEC < -34
B	-34 ≤ SEC < -26
C	-26 ≤ SEC < -23
D	-23 ≤ SEC < -20
E (Least efficient)	-20 ≤ SEC < -10

6 ERP values Flair 600

Technical information sheet Flair 600 in accordance with Ecodesign (ErP), no. 1254/2014 (Annex IV)					
Manufacturer:		**Brink Climate Systems B.V.**			
Model:		**Flair 600**			
Climate zone	**Type of control**	**SEC Value in kWh/m²/a**	**SEC Class**	**Annual electricity consumption (AEC) in kWh**	**Annual heating saved (AHS) in kWh**
Average	manual	-38.02	A	358	4630
	clock control	-38.92	A	328	4643
	1x sensor (RV/CO_2/VOC)	-40.60	A+	271	4670
	2 or more sensors (RV/CO_2/VOC)	-43.49	A+	177	4724
Cold	manual	-76.92	A+	895	9057
	clock control	-77.95	A+	865	9083
	1x sensor (RV/CO_2/VOC)	-79.89	A+	808	9136
	2 or more sensors (RV/CO_2/VOC)	-83.29	A+	714	9242
Hot	manual	-13.11	E	313	2093
	clock control	-13.93	E	283	2100
	1x sensor (RV/CO_2/VOC)	-15.46	E	226	2112
	2 or more sensors (RV/CO_2/VOC)	-18.06	E	132	2136
Type of ventilation unit:		Balanced residential ventilation appliance with heat recovery			
Fan:		EC - fan with infinitely variable control			
Type of heat exchanger:		Recuperative plastic cross-counterflow heat exchanger			
Thermal efficiency		92%			
Maximum flow rate:		600 m³/h			
Maximum rated power:		288 W			
Sound power level Lwa:		53 dB(A)			
Reference flow rate:		420 m³/h			
Reference pressure:		50 Pa			
Specific Power Input (SEL):		0.25 Wh/m³			
Control factor:		1.0 in combination with multiple switch			
		0.95 in combination with clock control			
		0.85 in combination with 1 sensor			
		0.65 in combination with 2 or more sensors			
Leakage*	Internal	0.70%			
	External	0.70%			
Position dirty filter indication:		On the display of the appliance / on the multiple switch (LED) / on the Brink Air Control. **Attention!** For optimal energy efficiency and a proper operation, a regular filter inspection, cleaning or replacement is necessary.			
Internet address for Assembly instructions:		https://www.brinkclimatesystems.nl/support/downloads			
Bypass:		Yes, 100% Bypass			

* Measurements executed by TZWL according to the DiBt-standards

Classification from 1 January 2016	
SEC class ("Average climate zone")	SEC in kWh/m²/a
A+ (Most efficient)	SEC < -42
A	-42 ≤ SEC < -34
B	-34 ≤ SEC < -26
C	-26 ≤ SEC < -23
D	-23 ≤ SEC < -20
E (Least efficient)	-20 ≤ SEC < -10

7 Recycling

Recycling

Sustainable materials are used in the manufacture of this appliance. The packaging should be disposed of in a responsible manner and in accordance with governmental regulations.

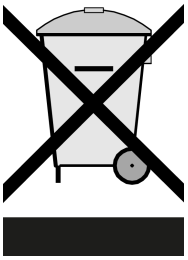

Brink Climate Systems B.V.
Wethouder Wassebaliestraat 8, NL-7951SN Staphorst
T: +31 (0) 522 46 99 44
E. info@brinkclimatesystems.nl
www.brinkclimatesystems.nl

617482-A